AWE-19US

Ultrasonic Electro-spark Deposition Welding Machine

USER MANUAL

CAUTION : PLEASE READ THIS USER MANUAL CAREFULLY BEFORE WELDING !

DIRECTORY

1: INSTRUCTIONS FOR SAFE USE	01
2: SUMMARY	02
3: MACHINE INSTALLATION	03~05
4: PARAMETER SETTINGS	05~06
5: WELDING ROD SELECTION	07
6: WELDING TECHNIQUES	07~08
7: WELDING GUN MAINTENANCE	09
8: FAULT DIAGNOSIS AND ELIMINATION	10

1: INSTRUCTIONS FOR SAFE USE

Operating requirements:

- The operator must be familiar with metal welding (cutting) operation
- When installing or checking, the power supply must be turned off
- Do not use the welding machine in case of removing the chassis
- Protective supplies need to be worn during the welding process

Electric shock hazard:

- Grounding according to application standard
- Do not touch the live parts when the skin is bare, wearing wet gloves or wearing wet clothes
- Ensure that you and the ground and the workpiece are insulated status
- Ensure that your station is in a safe state

Arc, Splash, Solder slag, Noise hazard:

- Please use protective utensils with sufficient shading degree
- Please wear long-sleeved overalls, boots, leather aprons and other protective utensils
- Use soundproofing utensils when the noise is high

Flue gas and fire hazards:

- Please keep ventilated and use protective utensils
- Do not place combustible and combustible gases in the weld area
- Please set up fire fighting utensils at the welding place, just in case

PLEASE READ THIS USER MANUAL CAREFULLY BEFORE WELDING !

2: SUMMARY

Working principle:

Electro-spark deposition process is to use the high-energy power stored and release instantly between electrode and matrix with high frequency release, through air ionization channels formed between the electrode and matrix to generate an instant high temperature, high pressure micro-region.

When a positively charged welding electrode discharges a negatively charged workpiece, a small amount of welding material is transferred into the workpiece. This machine utilizes the high frequency vibration of the new generation ultrasonic wave (more than 20,000 times per second) to realize repeated discharge transfer, so that the welding material is welded to the position of the workpiece which needs to be repaired, and the defect site is repaired.

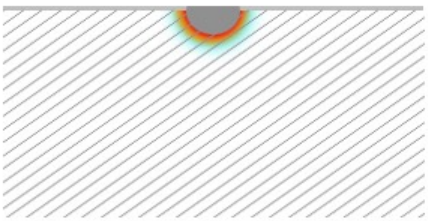

Cold welding heat affected zone

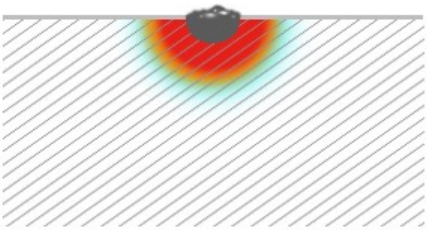

Traditional welding heat affected zone

Equipment using range:

- Steel mold repairing (all type of big and small size precision molds).
- Aluminum mold and Aluminum products welding (cylinder ; wheel hub etc).
- Ductile iron; Gray iron; Cast iron welding (auto parts and industry castings etc. after welding small color difference, can pass metallographic and hardness test).
- Hydraulic parts ; axle ; seal welding.
- Electric equipments ; mineral equipments ; machine tools welding.

3: MACHINE INSTALLATION

Safety warning:

- Please be sure to use three-core power socket, its grounding resistance should be less than 4 ohms
- The machine works with arc, to protect your eyes, please wear dark eye glasses
- Please use 220V single-phase AC power supply. If power supply is not stable please use a stabilizer, if higher than 220v it may cause a damage to the machine.
- Do not block the vents on both sides and back of the mainframe chassis. The heat dissipation space around the vents should be guaranteed 40-50mm. If you find that there is more dust in the vents, please clean it with a brush in time

Machine structure front and back view:

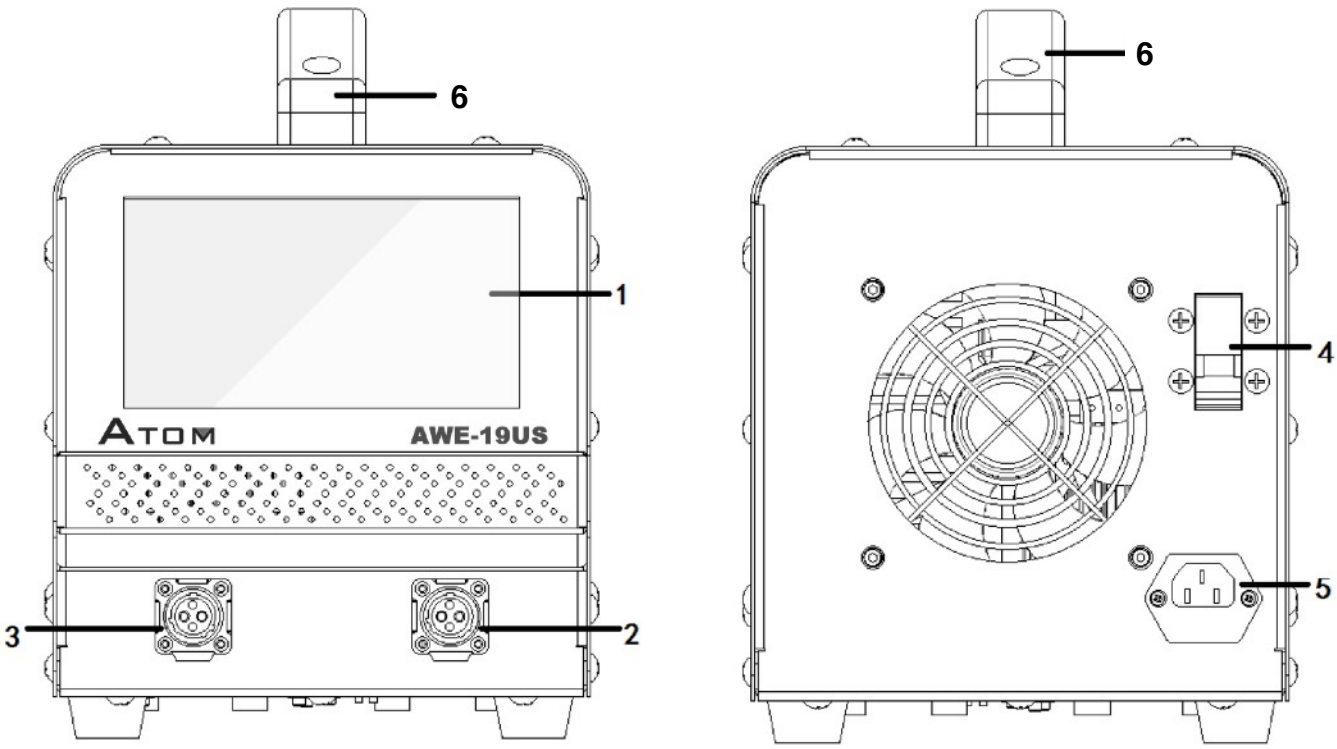

1	**LCD TOUCH SCREEN**	4	**POWER SWITCH**
2	**BOND STRAP**	5	**POWER SOCKET**
3	**WELDING GUN CONNECTOR**	6	**HANDLE**

Machine installation:

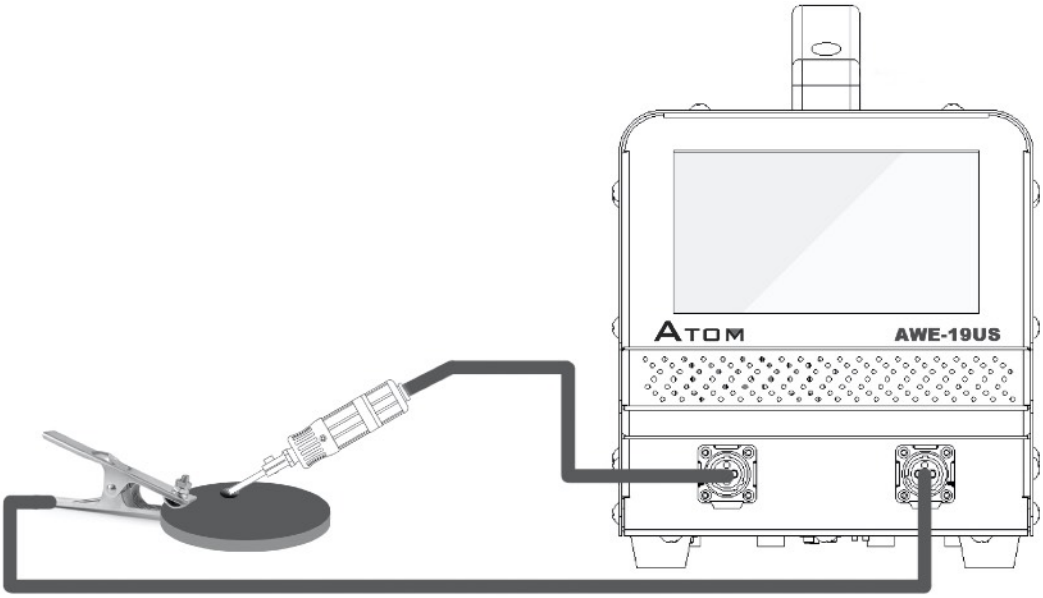

Welding gun installation:

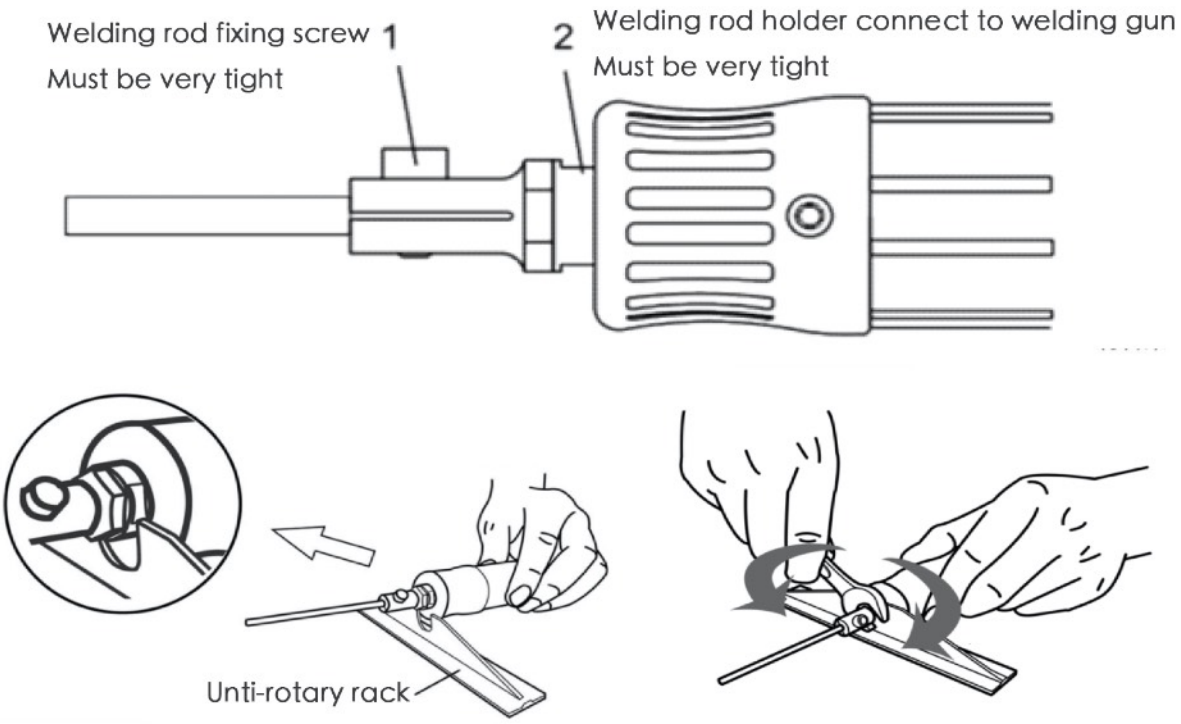

- The correct installation of welding rod holder is very important, it is the basis of whether deposition can proceed normally or not
- The welding rod holder and welding gun must connected very tight, and the welding rod must fixed into the welding rod holder very tight, otherwise the ultrasonic can not transmit to the welding rod, and can not finish the welding process
- The diameter of welding rod should match the welding rod holder. Whether bigger or smaller will not able to connect tightly to the welding rod holder and not able to weld
- Use the unti-rotary rack while installing the welding rod holder to the welding gun

4: PARAMETER SETTINGS

LCD screen:

The machine has 4 quick settings, press any of them and press "SELECT" to select

- "Fe" button: settings for Ductile iron / Grey iron / Steel / Cast iron welding
  Frequency: 4 , Current: 6 , Voltage: 7
- "Al" button: settings for Aluminum and aluminum alloy castings welding
  Frequency: 5 , Current: 4 , Voltage: 8
- "Cu" button: settings for Copper / Brass and copper related castings welding
  Frequency: 6 , Current: 5 , Voltage: 3
- "W-Coating" button: settings for surface hardening use tungsten electrode
  Frequency: 5 , Current: 5 , Voltage: 5

The Frequency / Current / Voltage can be adjusted base on different materials

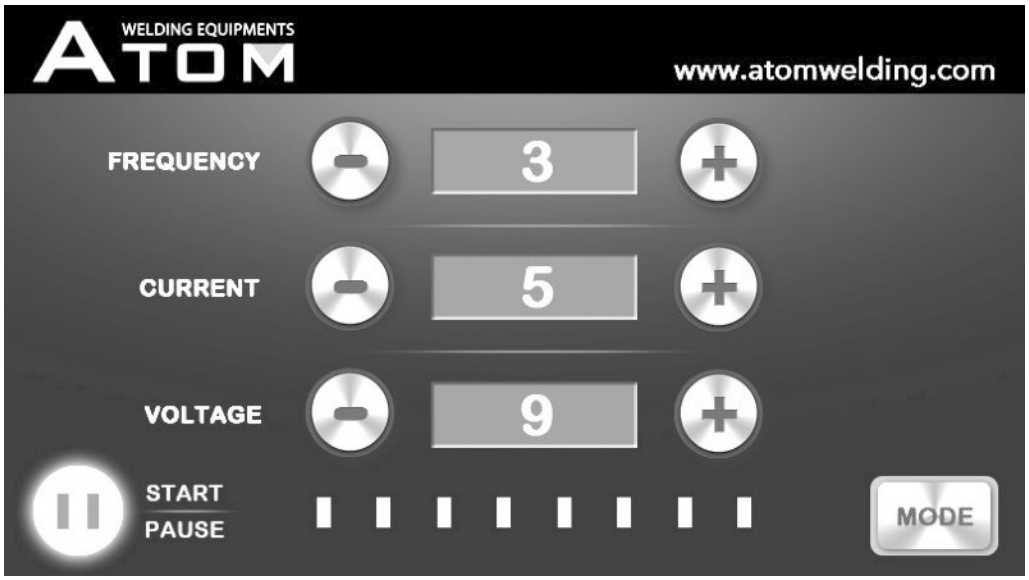

- Press "+" , "-" button to adjust the parameters of Frequency / Current / Voltage, numbers will change from 1 to 9
- Press "START/PAUSE" button can start or stop welding
- Press "MODE" button to select the four quick settings
- Bottom 8 dots shows the amplitude strength

Set right parameters:

Frequency determines the number of discharges per second. Higher frequency more numbers of discharges and faster welding speed, but more easily to produce pin hole on workpiece.

Current determines the size of particles (welding rod material) which are transferred each time. Smaller current value more precision welding and slower speed; Larger current value faster welding speed but lower welding quality. In general , the combination of small current and high frequency can improve welding quality and efficiency.

Voltage determines the energy of each discharge pulse, higher voltage high energy output and higher impact to the work piece. Lower voltage lower energy output lower impact to the workpiece and higher welding quality.

Therefore, in order to obtain the best welding speed and quality, need to adjust these three parameters to a reasonable value, different materials of the workpiece need to manually adjust and test.

5: WELDING ROD SELECTION

Supported welding rod:

AWE-19US supporting many different kinds of welding rod, so just choose the most matched one to get the best welding performance.

*** The welding rod must without flux, or it will not work ***

The standard diameter of welding rod to be used is Φ3mm, along with machine we will put Φ3mm electrode holders also.

For optimum vibration performance and stability, we suggest the welding rod not more than 150mm.

Can use longer welding rod or bent the welding rod to operate in a deep cavity or complex corner position.

The welding rod must fixed into the welding rod holder very tight, otherwise the ultrasonic can not transmit to the welding rod, and can not finish the welding process!

Defect hole size	Welding rod diameter
> 1mm	Φ3mm
< 1mm	Φ2mm / Φ1.5mm

6: WELDING TECHNIQUES

Basic welding technique:

The welding rod should be pressed slightly hard during welding so that the discharge gap between the welding rod and the workpiece is kept at a reasonable distance. If the pressure is too light, then the discharge gap is large, resulting in the welding rod quickly stacked high, but the density is very poor and also easily to produce oxidation interlayer.

If pressed too heavy, the ultrasonic will not be able to vibrate, so welding speed will be very slow and even not able to weld.

Continuous welding (especially use high current), should often lift the welding rod, observe the situation of the working surface, if found welding porosity, should be timely welded with the tip of the welding rod to keep the welding surface smooth.

Welding process:

WELDING MACHINE

Step 1: Correctly install the machine

Step 2: Install welding rod to the welding gun

Step 3: Select right welding mode

Step 4: Adjust parameters base on different materials

Step 5: Start welding

WORKPIECE

Step 1: Clean the defect hole with tools, such as dust / coating / oxidation layer inside the defect hole

Step 2: Start welding, press for one or two seconds then lift, repeat this operation

Step 3: Check if any porosity there and repeat Step 2

Step 4: Keep the welding surface 1mm or 2mm higher than the workpiece for grinding

TECHNICAL DATA OF AWE-19US

INPUT POWER	220V , 50/60Hz	**POWER**	1500W
WEIGHT	15KGS	**DIMENSION**	405*220*290MM
WELDING ROD DIAMETER	<= Φ4.0MM	**WELDING ROD LENGTH**	10-250MM

7: WELDING GUN MAINTENANCE

Structure of welding gun:

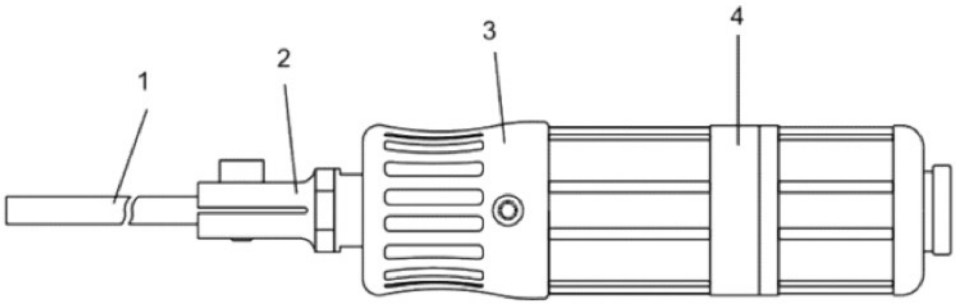

1	**WELDING ROD**	3	**THERMAL PROTECTION SLEEVE**
2	**WELDING ROD HOLDER**	4	**ULTRASONIC UNIT**

The welding gun is not waterproof, can not be immersed in water and do not make it wet. The transmission of ultrasonic vibration requires ensuring close contact between the various components: welding rod to welding rod holder / welding rod holder to welding gun must be tight enough.
If the welding rod holder is not tightened with the welding gun handle, the vibration will be lost on the vibration element inside the handle, the welding gun will become very hot and it may cause damage, also welding can not continue.
During welding the welding gun will also have a certain amount of heat especially when the welding rod is short. At this time can be properly rested to cool down or use a fan to assist cooling.
Please choose the matched diameter of welding rod to install on the welding rod holder.

8: FAULT DIAGNOSIS AND ELIMINATION

Question 1: Screen does not appear after boot

① Please check the power supply whether normal or not

② Please check the fuse whether fused or not

Question 2: welding rod sticks to the workpiece, the rebound is weak. The amplitude indicator is low, welding speed is low

All these phenomena indicate that the vibration state is not good at present.

① Press the "START/PAUSE" button to stop welding, press this button again, the machine will automatically re-match the optimal vibration frequency.

② Check whether the welding rod was hold tightly.

③ Check whether the welding rod holder was tightly connected with the welding gun.

④ Try to cut the welding rod a little bit (1 or 2 mm), and see whether welding is normal.

⑤ Try to replace a new welding rod holder and check whether welding is normal.

⑥ If all the above steps have been completed, but the machine still keeps alarming, please remove the welding gun from the machine and reboot the welding machine. If alarm disappeared, means the welding gun was broken, need to replace a new one, if the alarm screen still there, please contact with our company to get support.

Question 3: Welding speed very slow and can not deposit higher

① Current and voltage settings is small, try to increase to the right value.

② The welding electrode was not properly touched with workpiece and generated oxidation layers. Please try to remove these oxidation layers and continue welding.

Overheating warning screen

Vibration warning screen

Made in China.

QINGDAO ATOM WELDING EQUIPMENTS CO., LTD.
Website: www.atomwelding.com
Support email: info@atomwelding.com